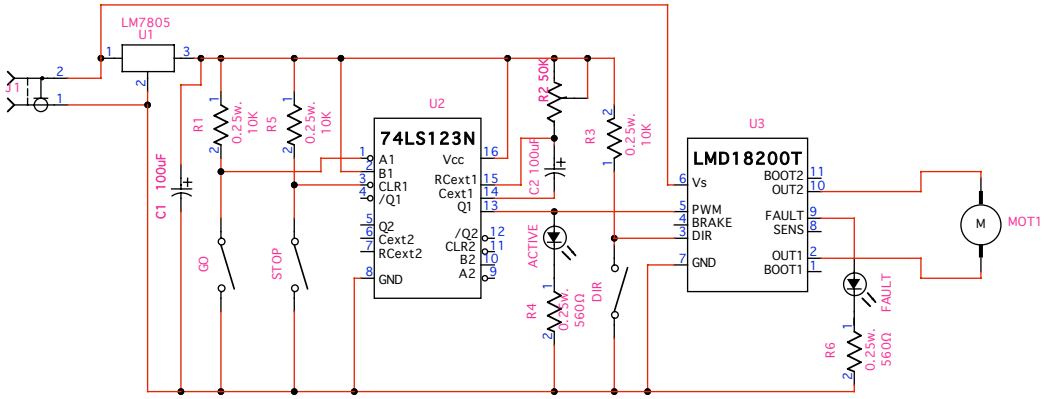

Projector Shutter Control Circuitry
Dan R. K. Ports
Drawn April 30, 2004